MULTIFUNCTION TIMER — RCT605

WITH MEMORY, 12 TIMING FUNCTIONS, 4 FIXED/CONFIGURABLE CONTROL INPUTS

- **Non-volatile memory**
- **2-setpoint, dual display**
- **9 user selectable ranges**
- **10 milliseconds to 9999 hours**
- **4 user selectable relay functions**
- **3 user selectable modes**
- **Incrementing / decrementing display**
- **4 control inputs**
- **Fixed/Configurable control inputs**
- **0.01% quartz crystal accuracy**
- **Supply voltage : 85 ~ 265 V AC OR 24 V DC**

SPECIFICATIONS

All specifications at ambient of 25 °C, unless specified otherwise

Range	See Table 3
Resolution	See Table 3
Accuracy	± 0.01% of reading ± 0.2 second
Timing start delay (after application of power)	0.05 Sec (max)
Memory	Not provided
OUTPUTS	
No. of relays	2
Relay contacts	1 x NO-C-NC (RL1) 1 x NO-C (RL2)
Relay contact rating	5A / 230V AC, resistive
Functions	See Fig.1~6
Mutual isolation between Input/Output/Supply	1500 V AC / 1 Minute
CONTROL INPUTS	
No. of control inputs	4
Control input function configuration	a) Fixed b) User configurable
Control input functions	See Table 1, 2
Assignment of control input functions to control inputs	a) Fixed : See Table 1 b) User configurable : i) Any control function can be assigned to any control input ii) One control function can be assigned to any one control input only (See Table 2)
Front panel reset	Will have the same function as reset function selected for control input
POWER SUPPLY	
Supply voltage	85~265 V AC OR 24 V DC
INDICATION	
Display	Upper : 4 digit, 7 segment 0.52" (13.2 mm) red LED display Lower : 4 digit, 7 segment 0.39" (9.9 mm) green LED display
MEMORY	Non volatile, indefinite retention (for elapsed time)

PROGRAMMABLE PARAMETERS	
SP1	0.01 to 9999
SP2	0.01 to 9999
Timer Start (After timer start)	Power ON, Control input 1(Start)
Control input 1	Refer Table 2 (For order code 2258-02)
Control input 2	Refer Table 2 (For order code 2258-02)
Control input 3	Refer Table 2 (For order code 2258-02)
Control input 4	Refer Table 2 (For order code 2258-02)
Units	Seconds / Minutes / Hours
Resolution	0.01, 0.1, 1
Functions	a) ON delay b) OFF delay c) Cyclic C1 (Relay ON at power ON) d) Cyclic C2 (Relay OFF at power ON) (See Fig 1, 2)
Direction	Up (incrementing) Down (decrementing)
Mode	Modes 0 ~ 2, See Fig 1 ~ 6
Relay2*	ON / OFF
Reset lock (For front key reset)	ON, OFF
Program lock	ON, OFF
OTHER	
Keyboard	Tactile, 3 keys
Enclosure construction	Plug-in (circuit removable without affecting terminal wiring)
Dimensions (in mm)	72(H) x 72(W) x 100(D)
Mounting	Panel mount
Panel cutout	68 x 68 mm
Operating ambient temperature	0~50 °C
Relative humidity	Below 90%, non condensing

*** Available only when mode 0 is selected.**

CAT#357R1/P1/4/**310317/A**

MULTIFUNCTION TIMER — RCT605

WITH MEMORY, 12 TIMING FUNCTIONS, 4 FIXED/CONFIGURABLE CONTROL INPUTS

OPERATING MODES

t1 = SETPOINT1 t2 = SETPOINT2 RELAY ON RELAY OFF SUPPLY ON START PULSE

MODE 0 - POWER ON START

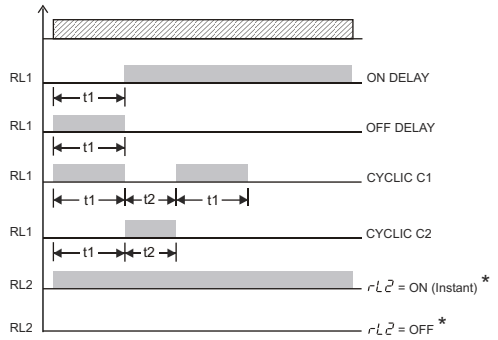

FIG 1

MODE 0 - START PULSE

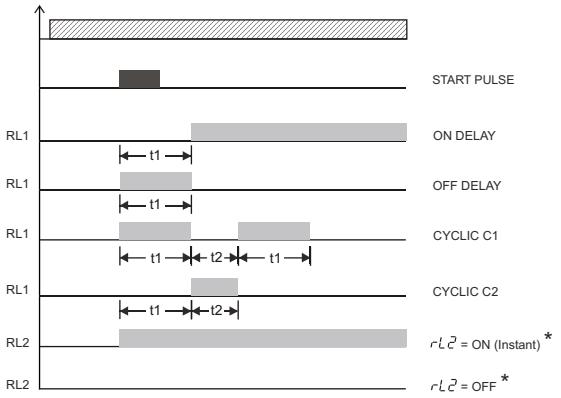

FIG 2

MODE 1 - POWER ON START

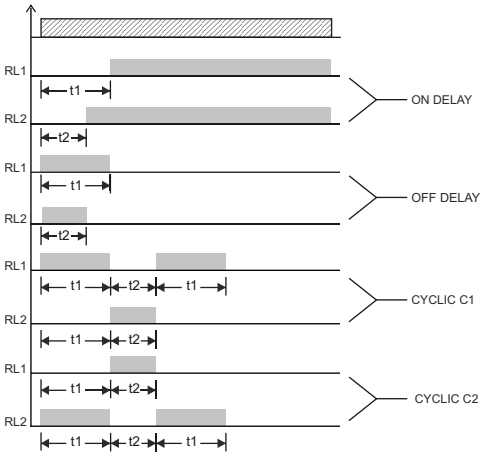

FIG 3

MODE 1 - START PULSE

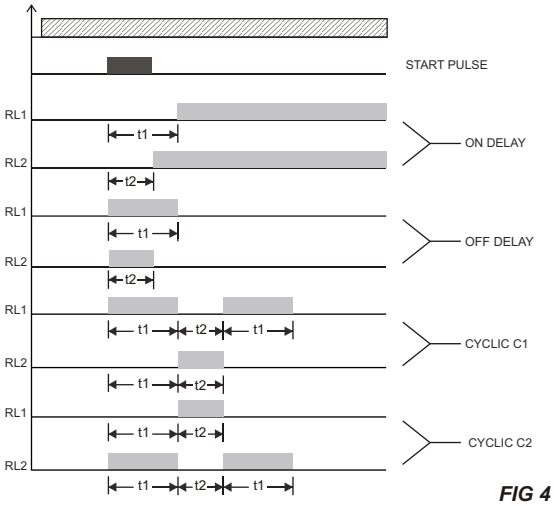

FIG 4

MODE 2 - POWER ON START

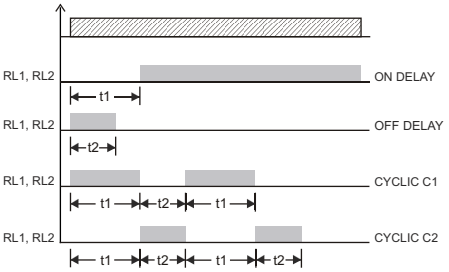

FIG 5

MODE 2 - START PULSE

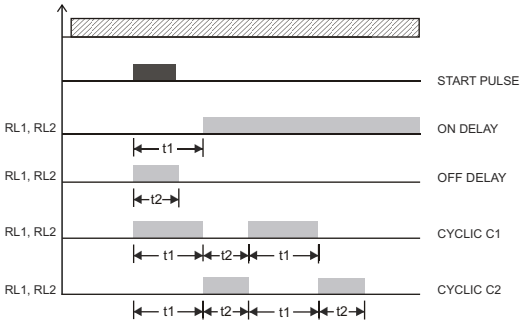

FIG 6

CAT#357R1/P2/4/310317/A

WITH MEMORY, 12 TIMING FUNCTIONS, 4 FIXED/CONFIGURABLE CONTROL INPUTS

TABLE 1 - FIXED CONTROL INPUTS (ORDER CODE : 2234-01)

	CONTROL INPUT FUNCTION	DESCRIPTION		CONTROL INPUT FUNCTION	DESCRIPTION
1	Start	Start the timer	3	Gate	Freeze the timer as long as input is present & relay maintain status.
2	Reset	Timer is reset as long as input is present, timer starts when input is removed.	4	Stop	Stop the timer & relay turn OFF.

TABLE 2 - CONFIGURABLE CONTROL INPUTS (ORDER CODE : 2234-02)

	CONTROL INPUT FUNCTION	DESCRIPTION		CONTROL INPUT FUNCTION	DESCRIPTION
1	Start	Start the timer	6	Gate2	Freeze the timer as long as input is present & relay turn ON.
2	Reset1	Timer is reset as long as input is present, timer starts when input is removed.	7	Gate3	Freeze the timer as long as input is present & relay turn OFF.
3	Reset2	Pulse reset, reset the timer & start immediate.	8	Stop1	Stop the timer & relay maintain status.
4	Reset3	Reset the timer, start pulse is require to start the timer.	9	Stop2	Stop the timer & relay turn ON.
5	Gate1	Freeze the timer as long as input is present & relay maintain status.	10	Stop3	Stop the timer & relay turn OFF.

TABLE 3 - RANGE SELECTION

UNIT	RANGE	RESOLUTION
s	99.99 s	0.01 s
s	999.9 s	0.1 s
s	9999 s	1 s
m	99 m 59 s	1 s
m	999.9 m	0.1 m
m	9999 m	1 m
h	99 h 59 m	1 m
h	999.9 h	0.1 h
h	9999 h	1 h

MULTIFUNCTION TIMER — RCT605

WITH MEMORY, 12 TIMING FUNCTIONS, 4 FIXED/CONFIGURABLE CONTROL INPUTS

CONNECTION DIAGRAM

FIXED INPUTS

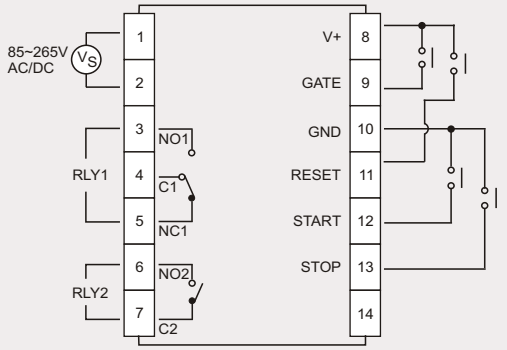

STK-326

Order code : 2234-01

CONFIGURABLE INPUTS

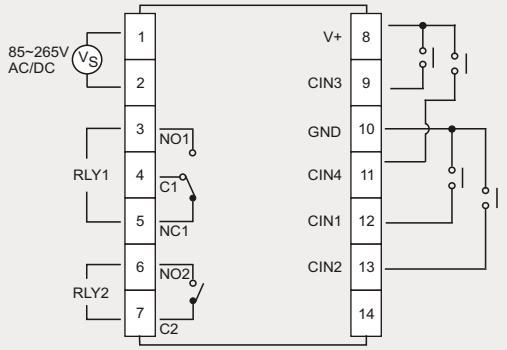

STK-320

Order code : 2234-02

ORDERING INFORMATION

ORDER CODE	
2234	A

A	Control Inputs
01	Fixed
02	Configurable

Ordering Options
The following ordering options are available on request.
Minimum order quantity and/or minimum order value may apply.

	Option	Details
1.	Supply voltage	24 V DC
2.	Supply voltage	24 V AC

radix®

RADIX ELECTROSYSTEMS PVT LTD
EL-135/136/137, Electronics Zone
TTC Indl. Area, MIDC, Mahape
Navi Mumbai - 400 710, India
+ 91 22 42537777 I sales@radix.co.in

OTHER ENQUIRIES
Instruments sales@radix.co.in
Sensors sensors@radix.co.in
Gauges gauges@radix.co.in
Automation automation@radix.co.in

CAT#357R1/310317/A